*PAB21X Maintenance



* Customers can put some grease on pivot points(red circle place), with brass or gunmetal bushings.





* Let's maintain your machine!

PAB-21X
HARDWARE LIST

PART #	SIZE	DESCRIPTION	QUANTITY
1	M10X65mm	HEX HEAD BOLT	4 PCS.
2	M10X70mm	HEX HEAD BOLT	4 PCS.
3	M10X70mm	THUMB SCREW	1 PCS.
4	M10X20mm	HEX HEAD BOLT	2 PCS.
5	3/8"X2 1/4"	HEX HEAD BOLT	1 PCS.
6	M10	NYLON LOCK NUT	6 PCS.
7	3/8"	NYLON LOCK NUT	1 PCS.
8	M10 (I.D.)	WASHER	7 PCS.
9	M10	SPRING WASHER	5 PCS.
10	2"X2"	END CAP	3 PCS.
11	51.5mm dia.	PULLEY	1 PCS.
12	6mm dia.	SPRING SNAP LINK	2 PCS.
13	820mm	STEEL CABLE	1 PCS.
14		HARNESS	1 PCS.

PAB-21X
HARDWARE ILLUSTRATION

PART #1 M10x65 HEX HEAD BOLT QTY. 4

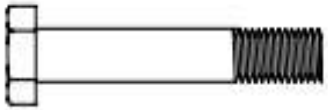

PART #2 M10x70 HEX HEAD BOLT QTY. 4

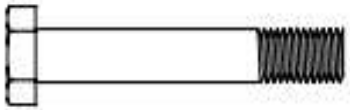

PART #3 M10x70 THUMB SCREW QTY. 1

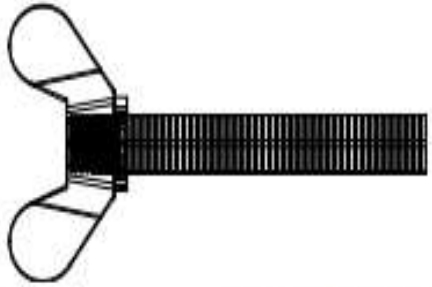

PART #4 M10x20 HEX HEAD BOLT QTY. 2

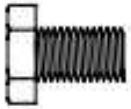

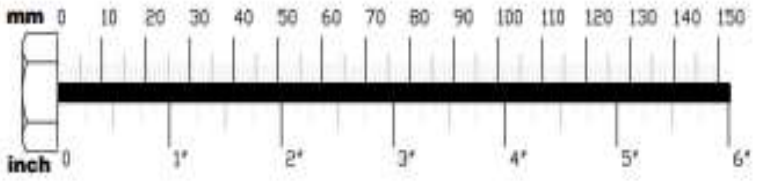

PAB-21X
HARDWARE ILLUSTRATION CONT.

PART #5 — 3/8"X2 1/4" HEX HEAD BOLT — QTY. 1

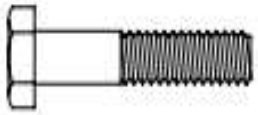

PART #6 — M10 NYLON LOCK NUT — QTY. 6



PART #7 — 3/8" NYLON LOCK NUT — QTY. 1



PART #8 — M10 WASHER — QTY. 7



PART #9 — M10 SPRING WASHER — QTY. 5



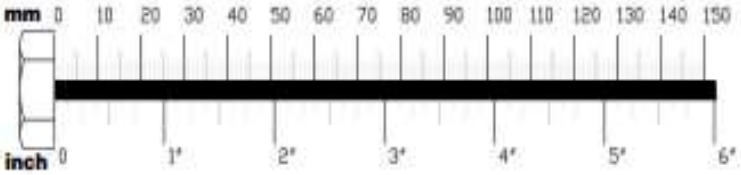

PAB-21X
HARDWARE ILLUSTRATION CONT.

PART #10 — 2"X2" END CAP — QTY. 3



PART #11 — 51.5MM DIA. PULLEY — QTY. 1



PART #12 — 6MM DIA. SPRING SNAP LINK — QTY. 2



PART #13 — 820MM STEEL CABLE — QTY. 1



PART #14 — HARNESS — QTY. 1

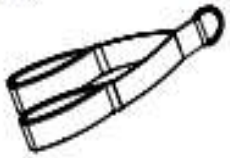

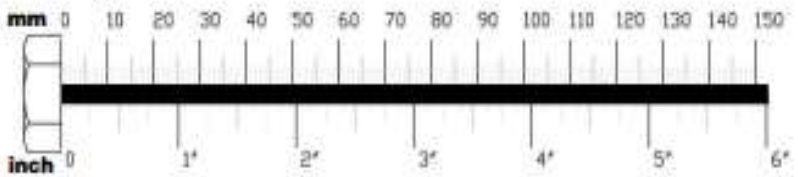

PAB-21X
PART LIST



PART A
LOWER MAINFRAME
[1 PCS]

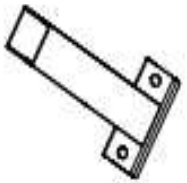

PART B
SEAT FRAME
[1 PCS]



PART C
MAINFRAME SUPPORT
[1 PCS]

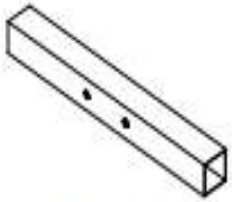

PART D
BOTTOM MAINFRAME
[1 PCS]



PART E
SEAT PAD
[1 PCS]



PART F
UPPER MAINFRAME
[1 PCS]



PART G
BACK PAD HOLDER
[1 PCS]

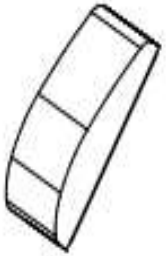

PART H
BACK PAD
[1 PCS]



PART I
WEIGHT HOLDER
[1 PCS]

PAB-21X
STEP 1

BE CAREFUL TO ASSEMBLE ALL COMPONENTS IN THE SEQUENCE THAT THEY ARE PRESENTED.

NOTE:

FINGER TIGHTEN ALL HARDWARE IN THIS STEP. DO NOT WRENCH TIGHTEN UNTIL THE LAST STEP. SOME COMPONENTS MAY BE PRE-ASSEMBLED. NYLON LOCK NUTS WILL NOT FULLY SCREW ONTO BOLTS, MUST WRENCH TIGHTEN.

1A. ATTACH SEAT FRAME (B) TO LOWER MAINFRAME (A) USING:
- 2 - (#1) M10X65MM HEX HEAD BOLT
- 2 - (#8) M10 WASHER
- 2 - (#6) M10 NYLON LOCK NUT

1B. ATTACH SEAT PAD (E) TO SEAT FRAME (B) USING:
- 2 - (#1) M10X65MM HEX HEAD BOLT
- 2 - (#9) M10 SPRING WASHER
- 2 - (#8) M10 WASHER

1C. ATTACH MAINFRAME SUPPORT (C) TO BOTTOM MAINFRAME (D) USING:
- 2 - (#3) M10X70MM HEX HEAD BOLT
- 2 - (#6) M10 NYLON LOCK NUT

1D. ATTACH END CAPS TO END OF SEAT FRAME (B) AND TO BOTH ENDS OF BOTTOM MAINFRAME (D) USING:
- 3 - (#10) 2"X2" END CAP

PAB-21X
STEP 1

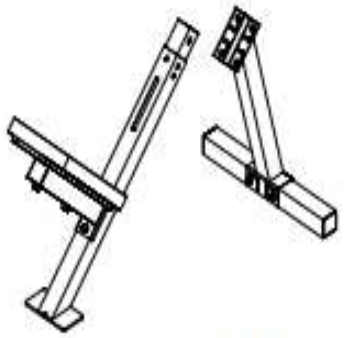

ABOVE SHOWS STEP 1
ASSEMBLED AND COMPLETED

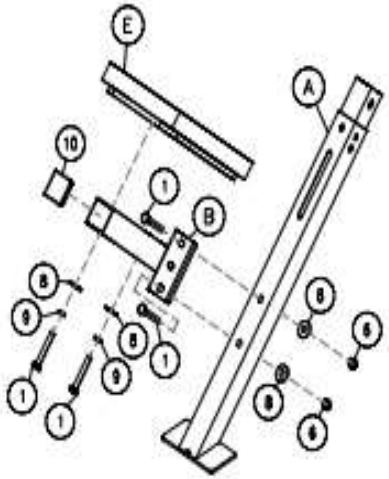

STEP 1A, 1B, 1D

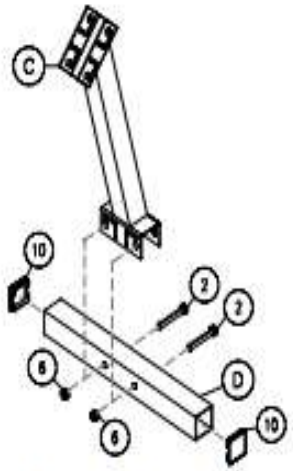

STEP 1C, 1D

PAB-21X
STEP 2

BE CAREFUL TO ASSEMBLE ALL COMPONENTS IN THE SEQUENCE THAT THEY ARE PRESENTED.

NOTE:

FINGER TIGHTEN ALL HARDWARE IN THIS STEP. DO NOT WRENCH TIGHTEN UNTIL THE LAST STEP. SOME COMPONENTS MAY BE PRE-ASSEMBLED. NYLON LOCK NUTS WILL NOT FULLY SCREW ONTO BOLTS, MUST WRENCH TIGHTEN.

2A. SLIDE UPPER MAINFRAME (F) ONTO LOWER MAINFRAME (A).

2B. ATTACH MAINFRAME SUPPORT (C) TO LOWER MAINFRAME (A) AND UPPER MAINFRAME (F) USING:
- 2 - (#2) M10X70MM HEX HEAD BOLT
- 2 - (#6) M10 NYLON LOCK NUT

2C. ATTACH BACK PAD (H) TO LOWER MAINFRAME (A) USING:
- 1 - (#3) M10X70MM THUMB SCREW
- 1 - (#9) M10 SPRING WASHER
- 1 - (#8) M10 WASHER

2D. ATTACH BACK PAD HOLDER (G) TO BACK PAD (H) USING:
- 2 - (#4) M10X20MM HEX HEAD BOLT
- 2 - (#9) M10 SPRING WASHER
- 2 - (#8) M10 WASHER

2E. ATTACH Ø51.5MM PULLEY (11) TO UPPER MAINFRAME (F) USING:
- 1 - (#5) 3/8"X2 1/4" HEX HEAD BOLT
- 1 - (#7) 3/8" NYLON LOCK NUT

2F. ROUTE 820MM CABLE (#13) OVER PULLEY (#11) AND UNDER BAR OF UPPER MAIN FRAME (F). ATTACH BALL END OF CABLE TO SNAP LINK (#12) THEN HARNESS (#14). ATTACH OTHER END OF CABLE TO SNAP LINK (#12) THEN WEIGHT HOLDER (I) WHICH MIGHT BE INSIDE A WHITE FOAM BOX.

PAB-21X
STEP 2

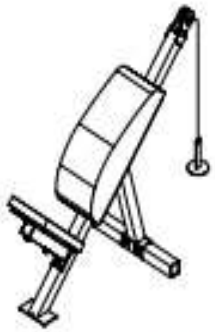

ABOVE SHOWS STEP 2
ASSEMBLED AND COMPLETED

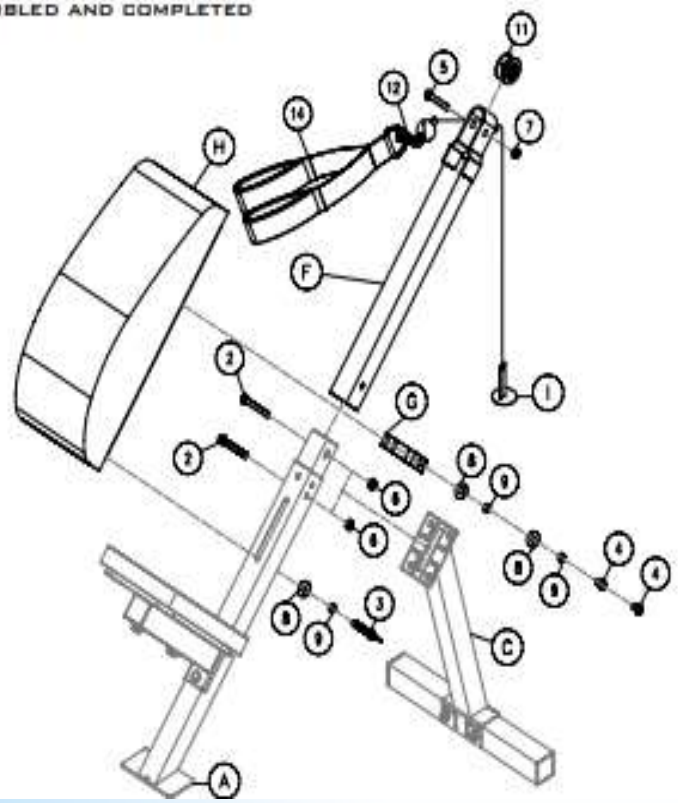

PAB-21X
EXPLODED VIEW

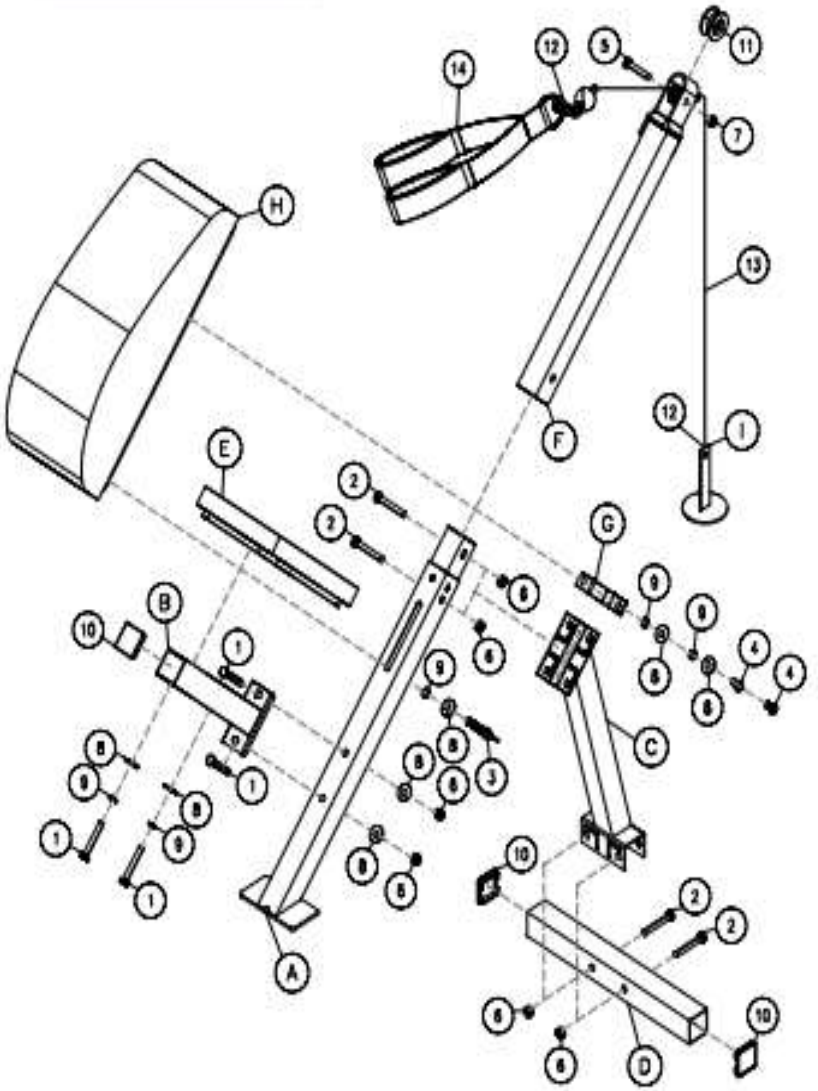

*Well done!

