*GHYP45 Maintenance



* Customers can put some grease on pivot points(red circle place), with brass or gunmetal bushings.





* Let's maintain your machine!

零件代碼	品 名 及 圖 案	用量	備 註
20GHYP45.2-A 烤EW282HD亮银	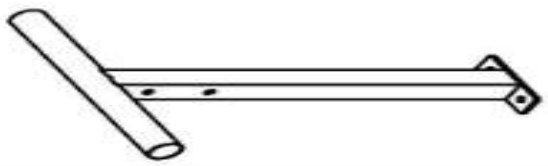	1PCS	
20GHYP45.2-B 烤EW282HD亮銀	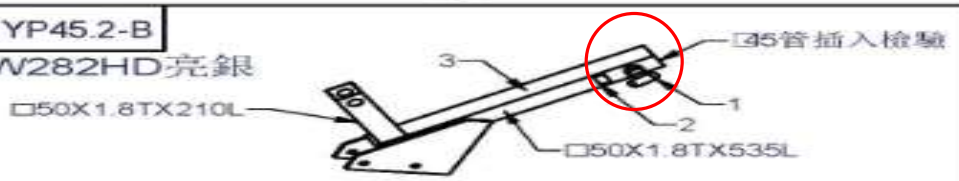	1PCS	1.組立8250-012(E10026) 7/8"调整組=1PCS 2.貼9440-104=1PCS 3.貼9440-199=1PCS
GHYP45.2-C 260405	电镀 10GHYP45.2-07 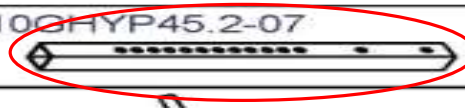	1PCS	□45X1.8TX620L
20GHYP45.2-D 烤EW282HD亮銀	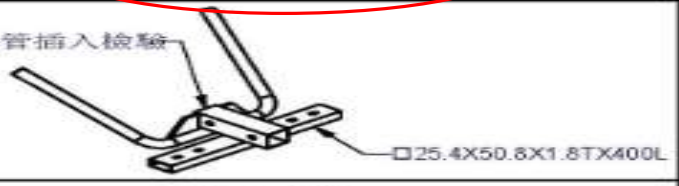	1PCS	1.組立9162-022高密度把手 (Ø24X5TX340)=2PCS
GHYP45.2-E 烤EW282HD亮銀 10GHYP45.2-11	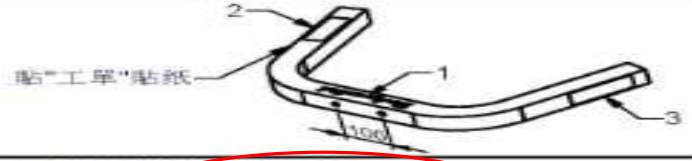	1PCS	1.貼9440-027=1PCS 2.貼9440-105=1PCS 3.貼9440-103=1PCS □50X1.8TX950L
GHYP45.2-F 260137A	电镀 10GHYP45.2-12 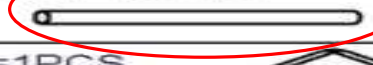	1PCS	Ø1"X1.6TX450L
9132-009 9132-010	左旋臂墊=1PCS 右旋臂墊=1PCS 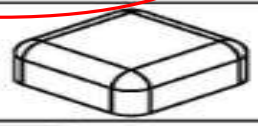	2PCS	
9161-054	泡棉 	2PCS	Ø4"X23X8"L
23GHYP45.2	附件包	1PCS	
G-GHYP45.2	螺丝包	1PCS	
KGHYP45.2	說明書	1PCS	

GHYP45.2 HARDWARE
(shown in actual size)

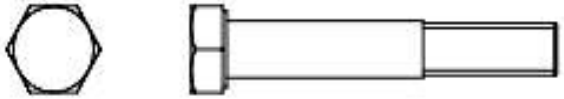

A1. M12X75 HEX HEAD BOLT.....2PCS

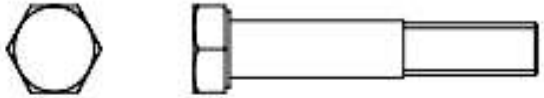

A2. M12X70 HEX HEAD BOLT.....2PCS

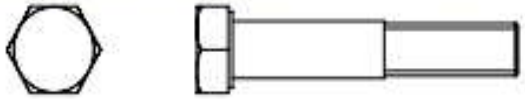

A3. M12X65 HEX HEAD BOLT.....2PCS

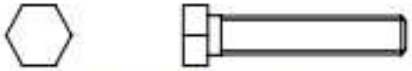

A4. 5/16"X1 3/4" HEX HEAD BOLT.....4PCS



B1. M12 NYLON LOCK NUT.....6PCS

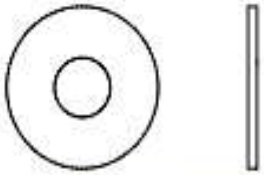

C1. M12 (I.D.)WASHER.....6PCS



GHYP45.2 HARDWARE
(shown in actual size)



C2. 5/16" (I.D.)WASHER.....4PCS



C3. 5/16" SPRING WASHER.....4PCS

GHYP45.2 HARDWARE
(shown in actual size)

A[1PCS]



B[1PCS]

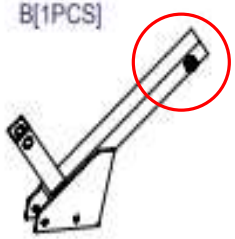

C[1PCS]
(10GHYP45.2-07)



D[1PCS]



E[1PCS]
(10GHYP45.2-11)



F[1PCS]
(10GHYP45.2-12)

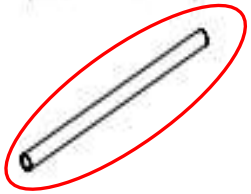

G[1PCS]
(9132-009)



H[1PCS]
(9132-010)



GHYP45.2 HARDWARE
(shown in actual size)

D1. Ø50 ROUND FOOT CAP (9212-008)....2PCS
D2. Ø1" ROUND END CAP (9211-022)....2PCS
D3. 2"X1 3/4" NYLON BUSHING (9211-030)....1PCS
D4. 2"X2" END CAP (9211-005)....1PCS
D5. 1 3/4"X1 3/4" END CAP (9211-004)....1PCS
D6. 1"X2" END CAP (9211-009)....2PCS
D7. Ø1" ROUND END CAP (9260-021)....2PCS
D8. 2"X2" FOOT CAP (9211-024)....2PCS
D11. 4"X23X8" FOAM ROLLER (9161-054)....2PCS

D1



D2



D3



D4



D5



D6



D7



D8



D11

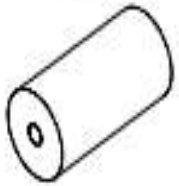

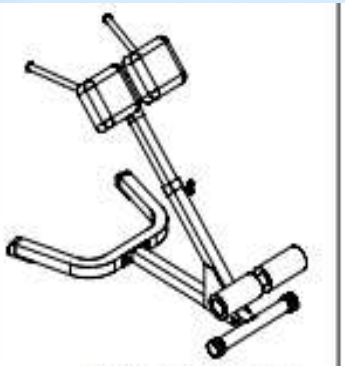

Above shows STEP 1
assembled and completed

STEP
1

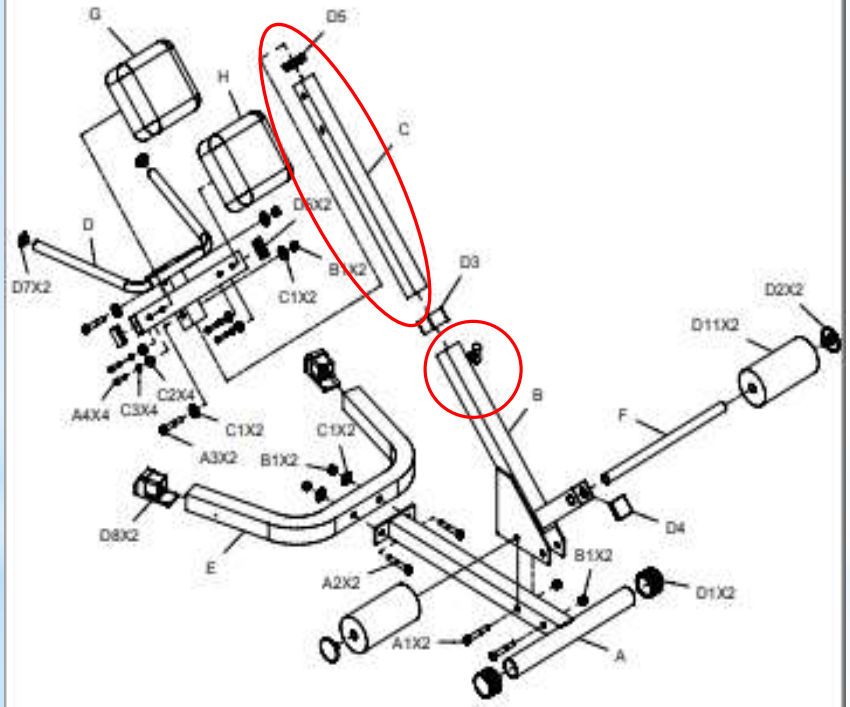

BODY SOLID #GHYP45.2

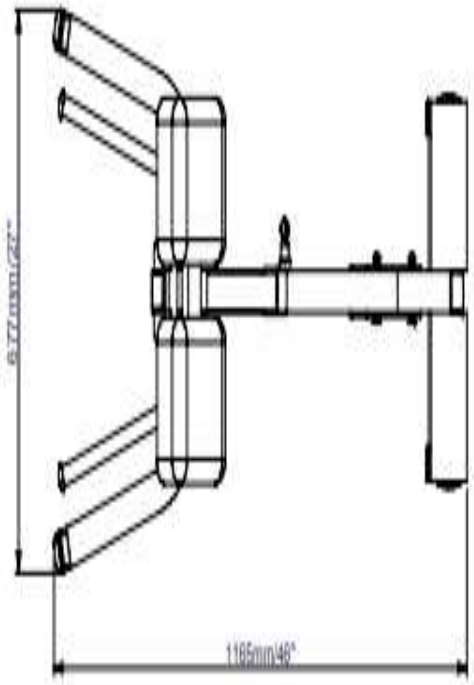

Floor Space Dimensions : L1165xW677xH903mm

*Well done!

